1

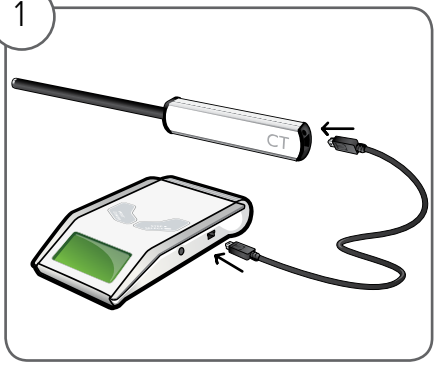

2

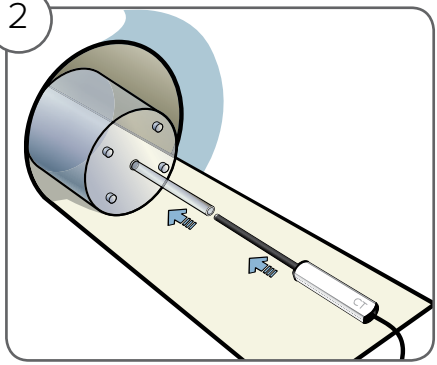

3

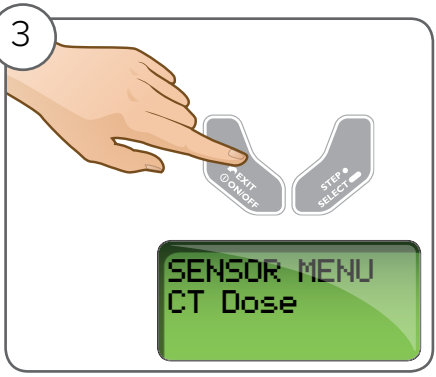

4

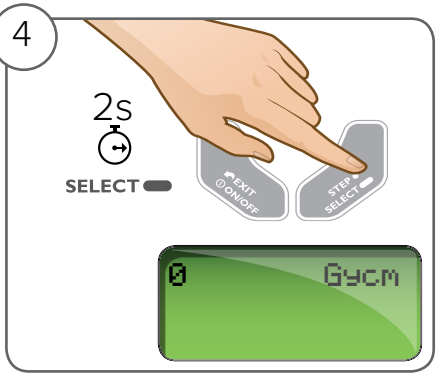

5

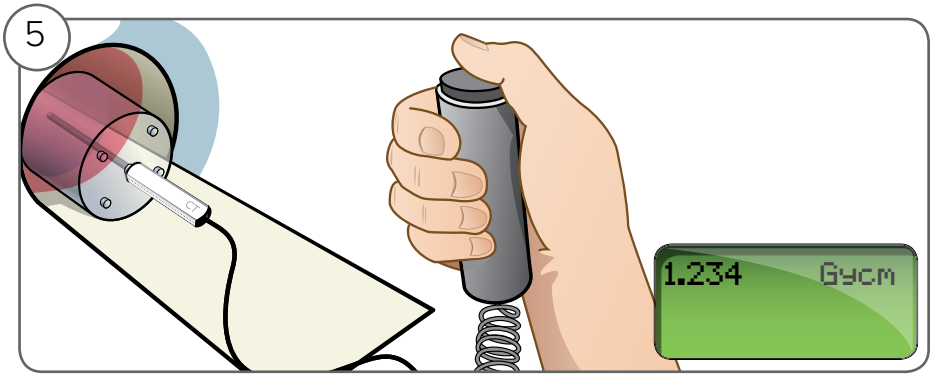

© 2013.03 Unfors RaySafe 5000164-A

RaySafe™